S C H Ü S S L E R

Hawk Eye®

HPC-PRECISION-ER-COLLET CHUCK

TOP 100 top100.de top innovator 2024

SCHÜSSLER the μ-maker

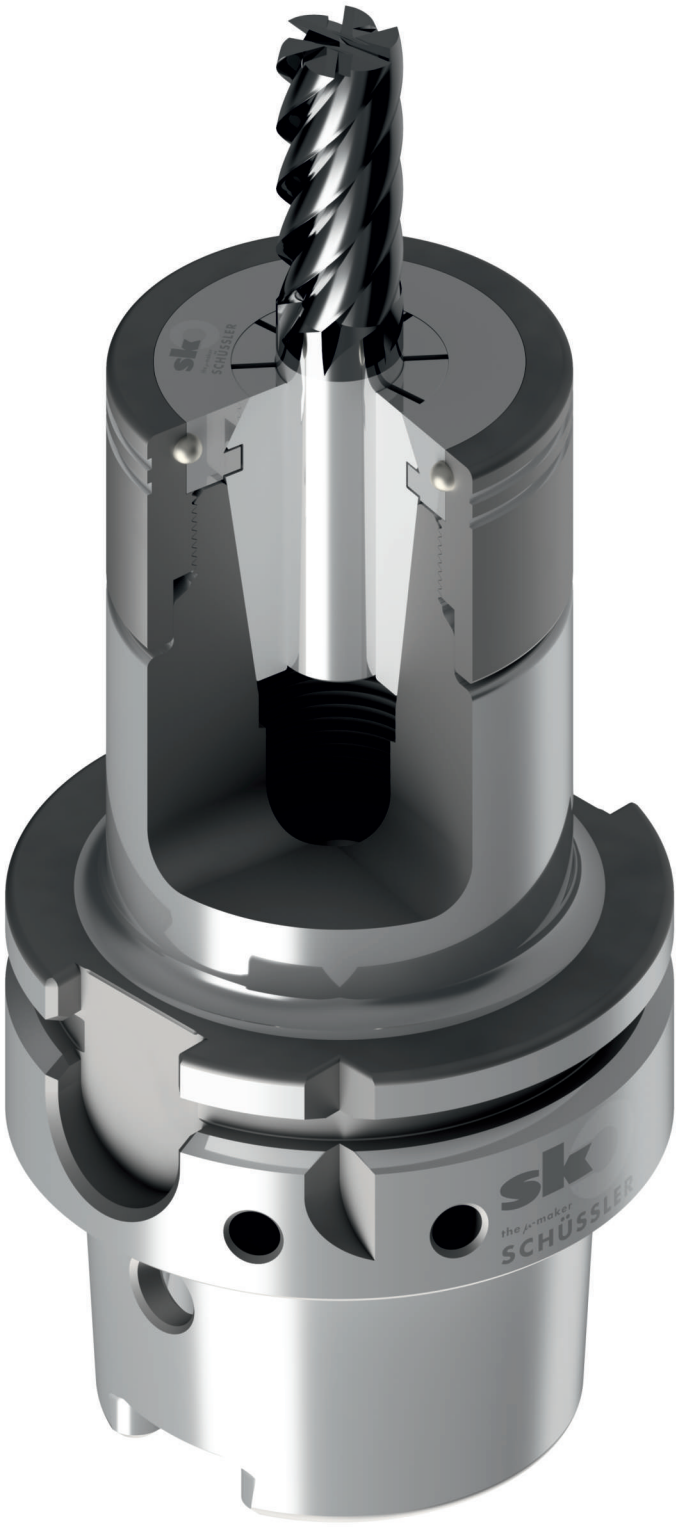

© Karl Schüssler GmbH & Co. KG, 2024

HPC-Precision-ER-Collet Chuck **HAWK EYE**®

engineered by SCHÜSSLER

Go for precision in perfection and fully exploit the potential of your machine and tools: high-precision concentricity features, combined with high clamping forces, for highly efficient machining.

New: our **HAWK EYE**® ER-collet chucks „**Mini**" in the versions HSK-A 63 / HSK-E 40 / SK 40 / BT 30 and BT 40.

MADE IN GERMANY

HAWK EYE® – Your benefits at a glance

The deep-seated collet inside the chuck guarantees:

- **precise runout** of cutting tool <= 3 µ bei 2,5 x D*
- a significant increase of **radial rigidity**
- **maximum contact** in the body of the chuck and double clamping forces compared to a standard ER collet chuck

* When using the original SCHÜSSLER collets.

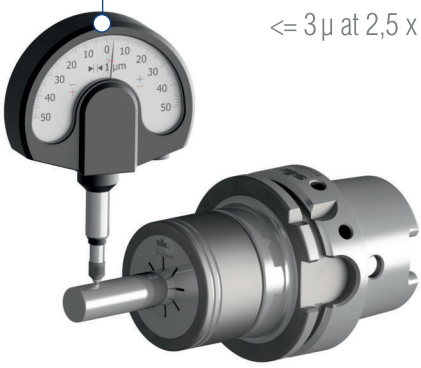

Runout of cutting tool
<= 3 µ at 2,5 x D

Fine pitch thread
for maximum clamping force

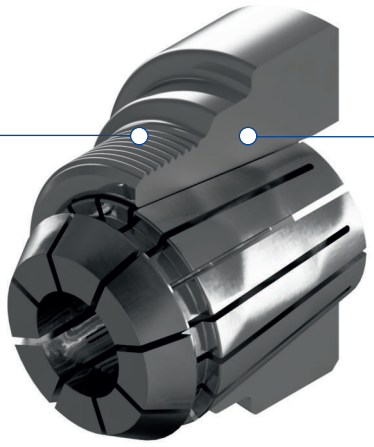

Enforced body of the chuck for ultimate stability and higher radial rigidity

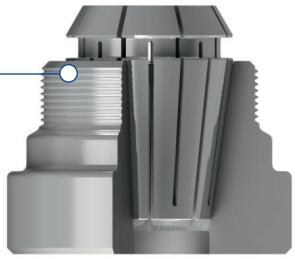

HAWK EYE®
deep seat of the collet inside the body of the chuck

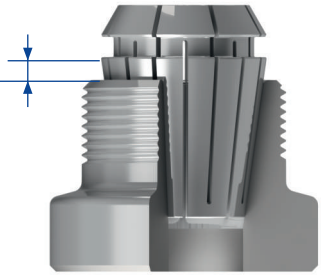

In comparison,
a standard ER-chuck

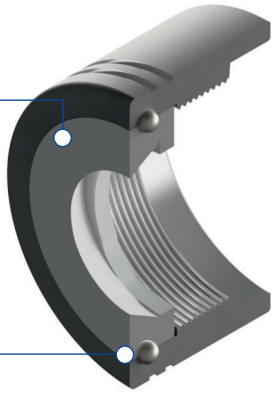

Clamping ring with special treated surface, for highest clamping forces

Ball-bearing clamping nut

HPC-Precision-ER-Collet Chuck HAWK EYE® / ER „Mini“

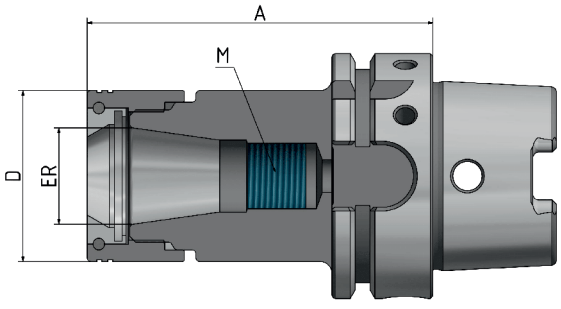

FINE BALANCED
G 2,5 at 25.000^{min-1} or max. residual imbalance ≤ 1 gmm

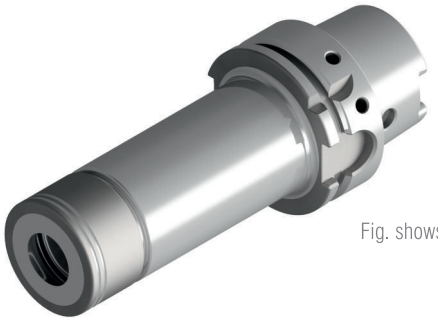

Fig. shows A = 160

Order No.	HSK	ER	D	A	Clamping range*	M	Version
606332-002	63	16	34	75	1–10	-	Extra short
606332-003	63	20	38	75	1–13	-	Extra short
606332-004	63	25	44	75	1–16	-	Extra short
606332-005	63	32	52	75	2–20	-	Extra short**
606332-006	63	40	62	85	4–26	-	Extra short**
606332-02	63	16	34	100	1–10	M11x1	Short
606332-04	63	25	44	100	1–16	M18x1,5	Short
606332-05	63	32	52	100	2–20	M24x1,5	Short
606332-06	63	40	62	120	4–26	M28x1,5	Short
606332-52	63	16	34	130	1–10	M11x1	Long
606332-54	63	25	44	130	1–16	M18x1,5	Long
606332-55	63	32	52	130	2–20	M24x1,5	Long
606332-62	63	16	34	160	1–10	M11x1	Extra long
606332-64	63	25	44	160	1–16	M18x1,5	Extra long
606332-65	63	32	52	160	2–20	M24x1,5	Extra long

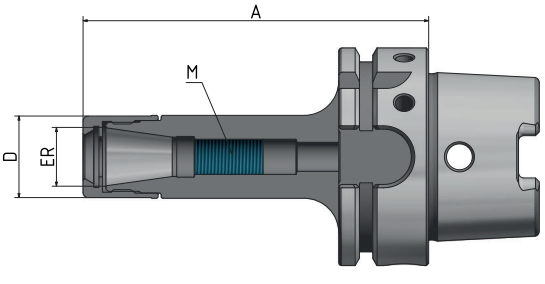

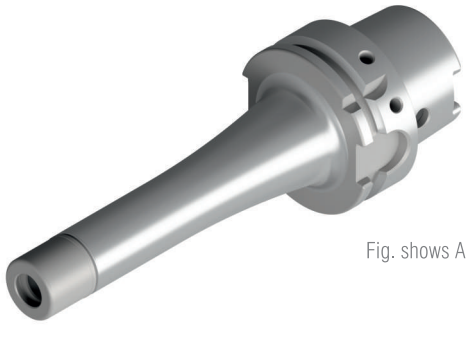

Fig. shows A = 160

HPC-Precision-ER-Collet Chuck HAWK EYE® „Mini”

Order No.	HSK	ER	D	A	Clamping range*	M	Version
606334-01	63	11	16	100	1–7	M8x1	Short
606334-02	63	16	24	100	1–10	M11x1	Short
606334-61	63	11	16	160	1–7	M8x1	Extra long
606334-62	63	16	24	160	1–10	M11x1	Extra long

* The chuck can only clamp the nominal diameter of the collet. Scope of delivery: including clamping nut.
** When using the Titanium collet, the collet stop must be removed.

HPC-Precision-ER-Collet Chuck HAWK EYE®

FINE BALANCED
G 2,5 at 25.000^{min-1} or
max. residual imbalance
≤ 1 gmm

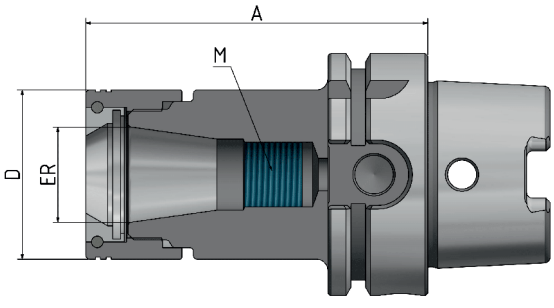

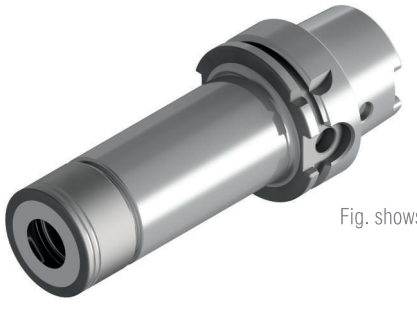

Fig. shows A = 160

Order No.	HSK	ER	D	A	Clamping range*	M	Version
610032-002	100	16	34	75	1–10	-	Extra short
610032-004	100	25	44	75	1–16	-	Extra short
610032-005	100	32	52	75	2–20	-	Extra short
610032-006	100	40	62	85	4–26	-	Extra short
610032-02	100	16	34	100	1–10	M11x1	Short
610032-04	100	25	44	100	1–16	M18x1,5	Short
610032-05	100	32	52	100	2–20	M24x1,5	Short
610032-06	100	40	62	120	4–26	M28x1,5	Short
610032-52	100	16	34	130	1–10	M11x1	Long
610032-54	100	25	44	130	1–16	M18x1,5	Long
610032-55	100	32	52	130	2–20	M24x1,5	Long
610032-56	100	40	62	130	4–26	M28x1,5	Long
610032-62	100	16	34	160	1–10	M11x1	Extra long
610032-64	100	25	44	160	1–16	M18x1,5	Extra long
610032-65	100	32	52	160	2–20	M24x1,5	Extra long
610032-66	100	40	62	160	4–26	M28x1,5	Extra long

* The chuck can only clamp the nominal diameter of the collet. Scope of delivery: including clamping nut.

HPC-Precision-ER-Collet Chuck HAWK EYE® / ER „Mini"

FINE BALANCED
G 2,5 at 25.000^{min-1} or
max. residual imbalance
≤ 1 gmm

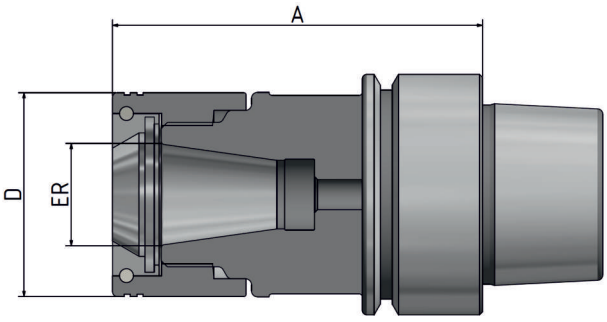

Fig. shows A = 60

Order No.	HSK	ER	D	A	Clamping range*	M
404032-02	40	16	34	60	1-10	-
404032-04	40	25	44	65	1-16	-

Order No.	HSK	ER	D	A	Clamping range*	M
405032-002	50	16	34	60	1-10	-
405032-004	50	25	44	70	1-16	-

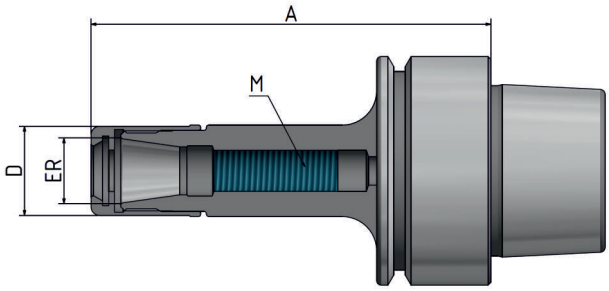

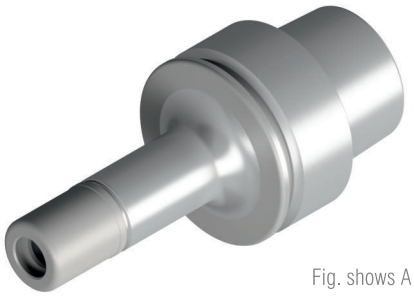

Fig. shows A = 70

HPC-Precision-ER-Collet Chuck HAWK EYE® „Mini"

Order No.	HSK	ER	D	A	Clamping range*	M
404034-001	40	11	16	70	1-7	M8x1
404034-002	40	16	24	70	1-10	M11x1

Order No.	HSK	ER	D	A	Clamping range*	M
405034-001	50	11	16	70	1-7	M8x1
405034-002	50	16	24	70	1-10	M11x1
405034-01	50	11	16	100	1-7	M8x1
405034-02	50	16	24	100	1-10	M11x1

* The chuck can only clamp the nominal diameter of the collet. Scope of delivery: including clamping nut.

HPC-Precision-ER-Collet Chuck HAWK EYE® / ER „Mini"

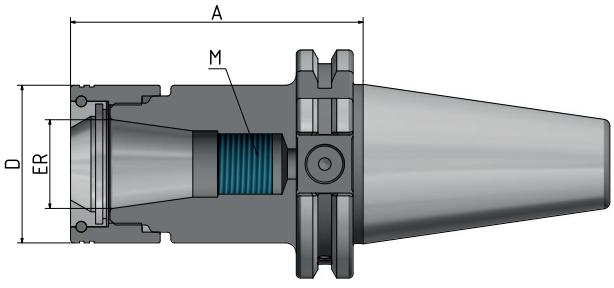

FINE BALANCED
G 2,5 at 25.000^{min-1} or
max. residual imbalance
≤ 1 gmm

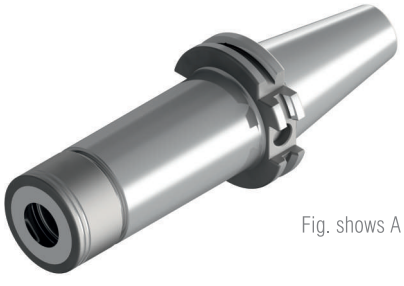

Fig. shows A = 160

Order No.	SK	ER	D	A	Clamping range*	M	Version
714032-02	40	16	34	70	1–10	M11x1	Short
714032-03	40	20	38	70	1–13	M14x1	Short
714032-04	40	25	44	70	1–16	M18x1,5	Short
714032-05	40	32	52	70	2–20	M24x1,5	Short
714032-06	40	40	62	70	4–26	M28x1,5	Short
714032-32	40	16	34	100	1–10	M11x1	Long
714032-34	40	25	44	100	1–16	M18x1,5	Long
714032-35	40	32	52	100	2–20	M24x1,5	Long
714032-36	40	40	62	100	4–26	M28x1,5	Long
714032-52	40	16	34	130	1–10	M11x1	Long
714032-54	40	25	44	130	1–16	M18x1,5	Long
714032-55	40	32	52	130	2–20	M24x1,5	Long
714032-62	40	16	34	160	1–10	M11x1	Extra long
714032-64	40	25	44	160	1–16	M18x1,5	Extra long
714032-65	40	32	52	160	2–20	M24x1,5	Extra long

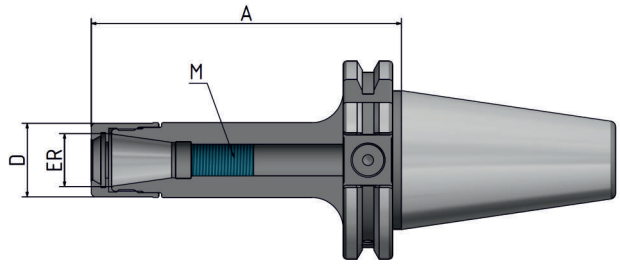

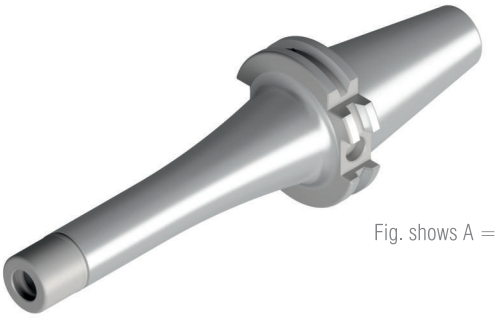

Fig. shows A = 160

HPC-Precision-ER-Collet Chuck HAWK EYE® „Mini"

Order No.	SK	ER	D	A	Clamping range*	M	Version
714034-31	40	11	16	100	1–7	M8x1	Short
714034-32	40	16	24	100	1–10	M11x1	Short
714034-61	40	11	16	160	1–7	M8x1	Extra long
714034-62	40	16	24	160	1–10	M11x1	Extra long

* The chuck can only clamp the nominal diameter of the collet. Scope of delivery: including clamping nut.

SK 50 ISO 7388-1
Form AD/AF

HPC-Precision-ER-Collet Chuck HAWK EYE®

FINE BALANCED
G 2,5 at 25.000^{min-1} or
max. residual imbalance
≤ 1 gmm

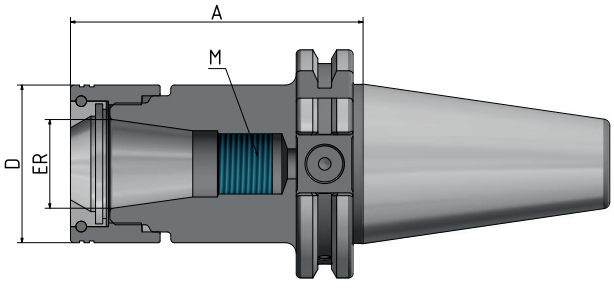

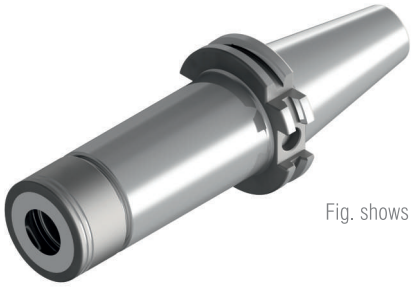

Fig. shows A = 160

Order No.	SK	ER	D	A	Clamping range*	M	Version
715032-04	50	25	44	70	1–16	M18x1,5	Short
715032-05	50	32	52	70	2–20	M24x1,5	Short
715032-06	50	40	62	70	4–26	M28x1,5	Short
715032-34	50	25	44	100	1–16	M18x1,5	Long
715032-35	50	32	52	100	2–20	M24x1,5	Long
715032-36	50	40	62	100	4–26	M28x1,5	Long
715032-54	50	25	44	130	1–16	M18x1,5	Long
715032-55	50	32	52	130	2–20	M24x1,5	Long
715032-56	50	40	62	130	4–26	M28x1,5	Long
715032-64	50	25	44	160	1–16	M18,1,5	Extra long
715032-65	50	32	52	160	2–20	M24x1,5	Extra long
715032-66	50	40	62	160	4–26	M28x1,5	Extra long

* The chuck can only clamp the nominal diameter of the collet. Scope of delivery: including clamping nut.

HPC-Precision-ER-Collet Chuck HAWK EYE® / ER „Mini"

FINE BALANCED
G 2,5 at 25.000^{min-1} or
max. residual imbalance
≤ 1 gmm

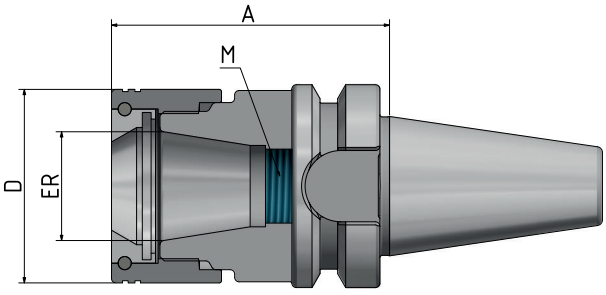

Fig. shows A = 60

Order No.	BT	ER	D	A	Clamping range*	M	Version
753032-02	30	16	34	60	1–10	M11x1	Extra short
753032-04	30	25	44	60	1–16	M18x1,5	Extra short

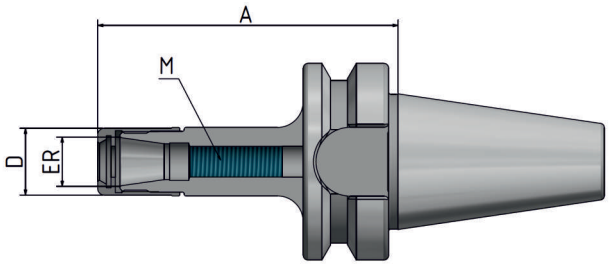

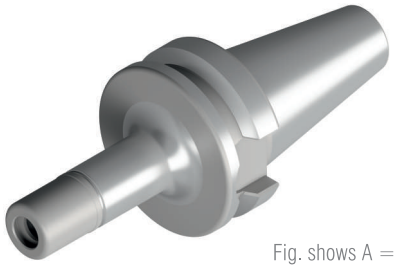

Fig. shows A = 70

HPC-Precision-ER-Collet Chuck HAWK EYE® „Mini"

Order No.	BT	ER	D	A	Clamping range*	M	Version
753034-01	30	11	16	70	1–7	M8x1	Short
753034-02	30	16	24	70	1–10	M11x1	Short

* The chuck can only clamp the nominal diameter of the collet. Scope of delivery: including clamping nut.

HPC-Precision-ER-Collet Chuck HAWK EYE® / ER „Mini“

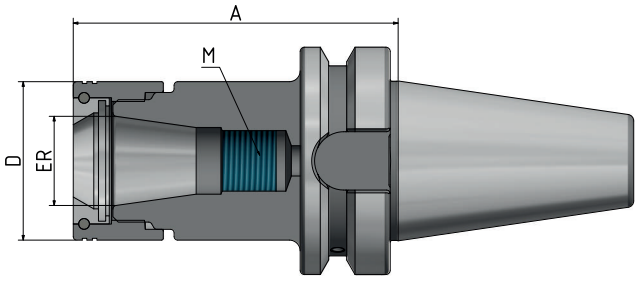

FINE BALANCED
G 2,5 at 25.000^{min-1} or
max. residual imbalance
≤ 1 gmm

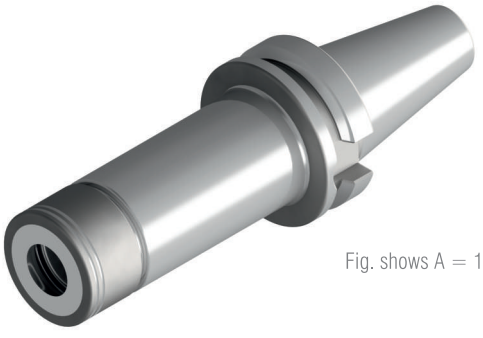

Fig. shows A = 160

Order No.	BT	ER	D	A	Clamping range*	M	Version
754032-02	40	16	34	70	1–10	M11x1	Short
754032-03	40	20	38	70	1–13	M18x1	Short
754032-04	40	25	44	70	1–16	M18x1,5	Short
754032-05	40	32	52	70	2–20	M24x1,5	Short
754032-06	40	40	62	70	4–26	M28x1,5	Short
754032-32	40	16	34	100	1–10	M11x1	Long
754032-34	40	25	44	100	1–16	M18x1,5	Long
754032-35	40	32	52	100	2–20	M24x1,5	Long
754032-36	40	40	62	100	4–26	M28x1,5	Long
754032-52	40	16	34	130	1–10	M11x1	Long
754032-54	40	25	44	130	1–16	M18x1,5	Long
754032-55	40	32	52	130	2–20	M24x1,5	Long
754032-62	40	16	34	160	1–10	M11x1	Extra long
754032-64	40	25	44	160	1–16	M18x1,5	Extra long
754032-65	40	32	52	160	2–20	M24x1,5	Extra long

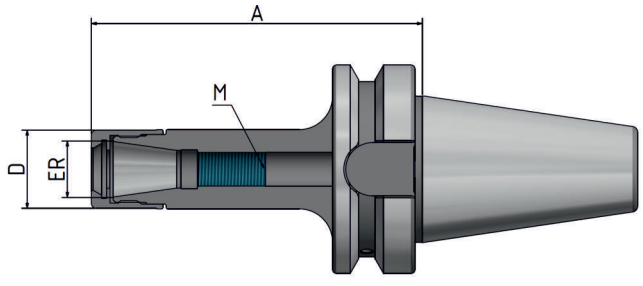

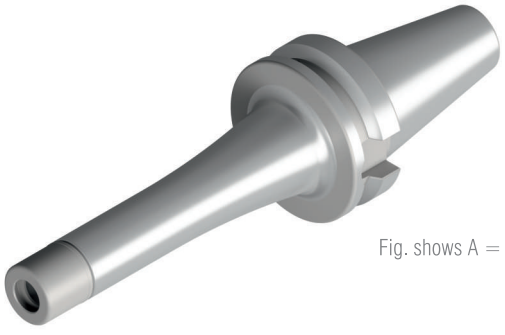

Fig. shows A = 160

HPC-Precision-ER-Collet Chuck HAWK EYE® „Mini”

Order No.	BT	ER	D	A	Clamping range*	M	Version
754034-31	40	11	16	100	1–7	M8x1	Short
754034-32	40	16	24	100	1–10	M11x1	Short
754034-61	40	11	16	160	1–7	M8x1	Extra long
754034-62	40	16	24	160	1–10	M11x1	Extra long

* The chuck can only clamp the nominal diameter of the collet. Scope of delivery: including clamping nut.

HPC-Precision-ER-Collet Chuck HAWK EYE®

FINE BALANCED
G 2,5 at 25.000^{min-1} or
max. residual imbalance
≤ 1 gmm

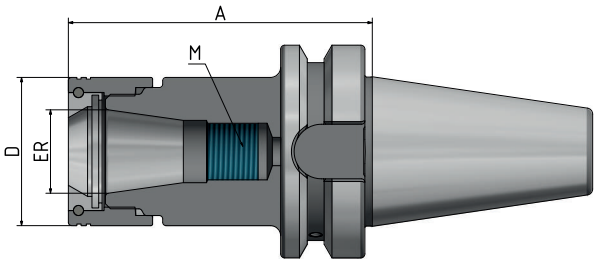

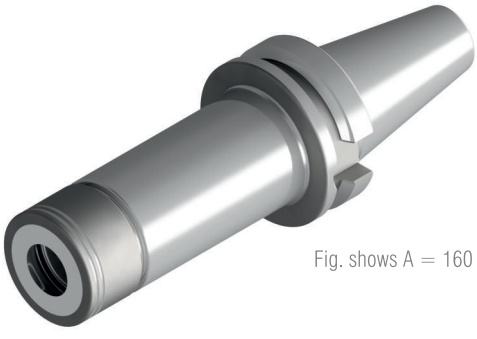

Fig. shows A = 160

Order No.	BT	ER	D	Clamping range*	A	Version
755032-04	50	25	44	1–16	70	Short
755032-05	50	32	52	2–20	70	Short
755032-06	50	40	62	4–26	80	Short
755032-34	50	25	44	1–16	100	Long
755032-35	50	32	52	2–20	100	Long
755032-36	50	40	62	4–26	100	Long
755032-54	50	25	44	1–16	130	Long
755032-55	50	32	52	2–20	130	Long
755032-56	50	40	62	4–26	130	Long
755032-64	50	25	44	1–16	160	Extra long
755032-65	50	32	52	2–20	160	Extra long
755032-66	50	40	62	4–26	160	Extra long

* The chuck can only clamp the nominal diameter of the collet. Scope of delivery: including clamping nut.

HPC-Precision-ER-Collet Chuck HAWK EYE® / CORUM C6 (Polygonal shank)

FINE BALANCED
G 2,5 at 25.000^{min-1} or
max. residual imbalance
≤ 1 gmm

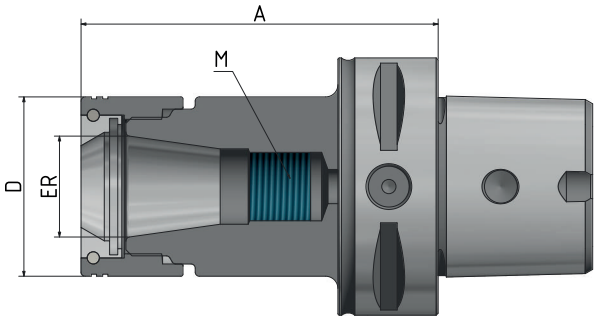

Fig. shows A = 100

Order No.	C	ER	D	A	Clamping range*	M	Version
306332-31	6	16	34	100	1–10	M11x1	Long
306332-32	6	25	44	100	1–16	M18x1,5	Long
306332-33	6	32	52	100	2–20	M24x1,5	Long

* The chuck can only clamp the nominal diameter of the collet. Scope of delivery: including clamping nut.

ER-collets – repeatable accuracy 2µ and 5µ

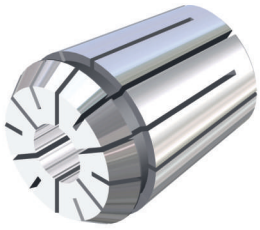

- High precision design with concentricity and repeat accuracy of 2µ or 5µ.
- All lengthwise edges deburred and rounded additionally. This protects the inner cone of the chuck and provides constistently high concentricity.
- Increased holding forces and rigidity by super-finish-version.

You can find the whole product range of 2 µ and 5 µ collets as well as other versions in our current catalogue!

Roller bearing wrench head HAWK EYE®

Order No.	Square drive	ER	D
163-42	9x12	16	34
163-43	14x18	20	38
163-44	14x18	25	44
163-45	14x18	32	52
163-46	14x18	40	62

Roller bearing wrench HAWK EYE®, one-piece

Order No.	ER	D
163-12	16	34
163-13	20	38
163-14	25	44
163-15	32	52
163-16	40	62

Torque wrench

Order No.	VK
163-83	9x12
163-85	14x18

Clamping nut HAWK EYE® with ball bearing

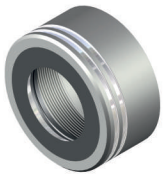

Order No.	ER	D
137-02R	16	34
137-03R	20	38
137-04R	25	44
137-05R	32	52
137-06R	40	62

Clamping nut HAWK EYE®, one-piece

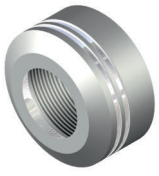

Order No.	ER	D
137-42R	16	34
137-44R	25	44
137-45R	32	52
137-46R	40	62

Clamping nut HAWK EYE® ER „Mini"

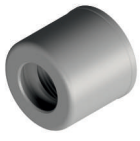

Order No.	ER	D
137-01M	11	16
137-02M	16	24

Roller bearing wrench HAWK EYE® ER "Mini", one-piece

Order No.	ER	D
163-21	11	16
163-22	16	24

Roller bearing wrench head HAWK EYE® ER "Mini"

Order No.	VK	ER	D
163-91	9x12	11	16
163-92	9x12	16	24

S C H Ü S S L E R

TITANIUM

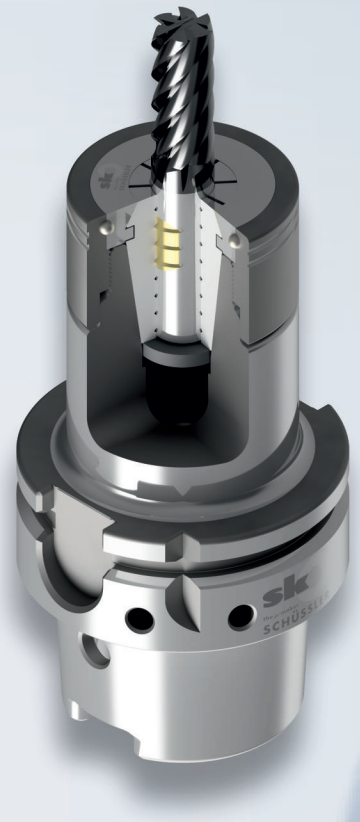

ER-collet system TITANIUM – secuRgrip®

In HPC milling processes such as iMachining or full-slot milling, even the highest holding forces are often insufficient to prevent tool pull-out. This results in additional costs for amendent or deficient product. To avoid this, we have a powerful solution: the combination of SCHÜSSLER's ER-collet chuck HAWK EYE® with our ER-collet system TITANIUM - secuRgrip® for highest concentricity, perfect damping and 100 % protection against tool pull-out.

Your benefits at a glance:

- optimization of process times (metal removal rate)
- safety and precision even with materials that are difficult to machine or with high-quality and time-intensive workpieces
- improvement of tool life
- reduction of tool breakage
- longer lifetime of machine spindle
- ultimate tool pull-out protection

The HPC-Precision-ER-collet chuck HAWK EYE® in combination with the ER collet system TITANIUM – a 100 % secure connection!

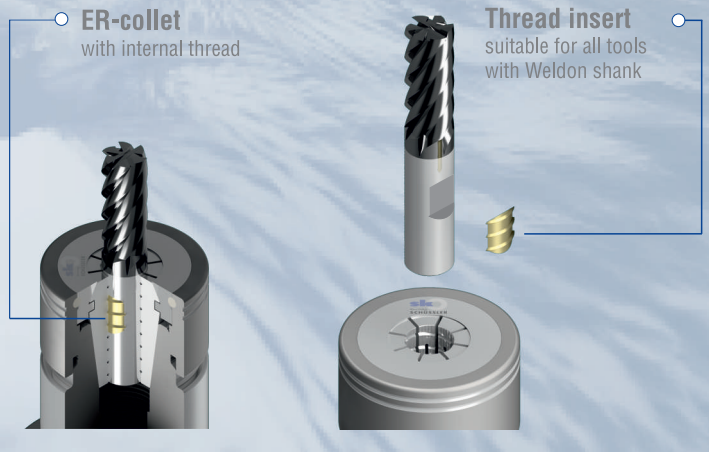

Order No. ER-collet secuRgrip®	ER	D	Order No. Thread insert secuRgrip®	D
125-410	32	10	136-10	10
125-412	32	12	136-12	12
125-416	32	16	136-16	16
125-516	40	16	136-16	16
125-520	40	20	136-20	20
125-525	40	25	136-25	25

secuRgrip® is a registered and protected brand name of REGO-FIX AG.

SCHÜSSLER Tool Holding Systems – Your Lead in Production!

MADE IN GERMANY

Brilliant performance from Bodelshausen

For over 50 years, we, the SCHÜSSLER company, have been manufacturing our tool holders exclusively in Bodelshausen. Today we are one of the leading manufacturers and enjoy an excellent reputation worldwide. Our products are manufactured at the highest quality level.

We guarantee the durability of our tool holders and offer an excellent price-performance ratio. Our experienced sales team is always at your disposal providing a friendly, committed and competent service.

Our product range (excerpt):

- Collet chucks-ER and ER “Mini”
- HAWK EYE® HPC-Precision ER-collet chucks and HAWK EYE “Mini”
- Shrink fit chucks 4,5° and 3° (slim)
- Endmill holders Weldon
- Tool holders with coolant for “Cool Tool” version
- Shell mill holders
- Shrink fit machines + accessories
- Balancing machines + accessories

Our tool holders are available in all standard taper shanks, such as:

- HSK-A 40/50/63/80/100
- HSK-E 32/40/50 and HSK-F 63
- SK 40 and 50 DIN 69871 Form AD/B
- MAS BT 30/40/50 and BT with double contact BTD 30/40
- Polygon shank “CORUM” C4/5/6/8

All types of tool holders are generally available in various lengths and are always fine-balanced G 2,5 at 25.000 min^{-1}.

Karl Schüssler GmbH & Co. KG
Bahnhofstrasse 108
72411 Bodelshausen
Phone +49 7471 9590-0
info@k-schuessler.de
www.k-schuessler.de

TOP 100 top-100.de top innovator 2024

SCHÜSSLER the µ-maker